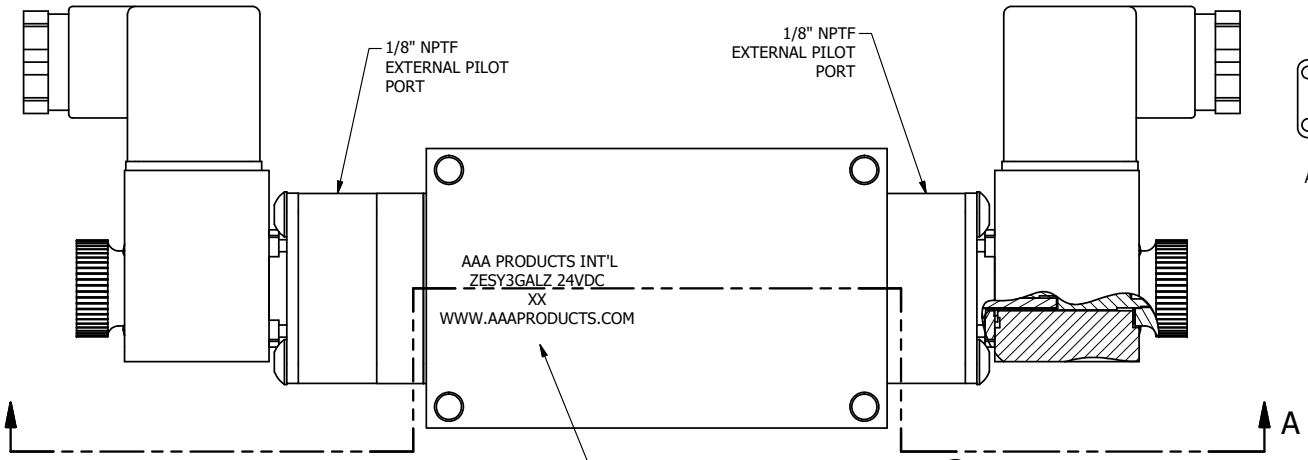


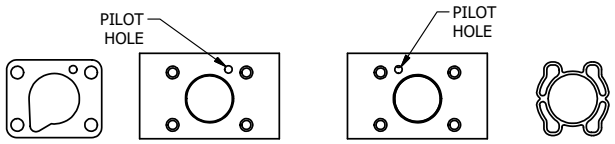


ALIGN PILOT AND HOLE IN GASKET
SIDE 'B' ONLY

ALIGN PILOT AND SLOT IN ADAPTOR
WITH GASKET IN BETWEEN, BOTH SIDES
(ADAPTOR SHOULD BE INSTALLED AS SHOWN)
SUPPLY 50-150 PSI TO 1/8" NPTF PILOT PORT IN ADAPTOR.

NOTES:
1) ALWAYS GIVE VALVE MODEL AND PART NUMBER WHEN ORDERING PARTS.

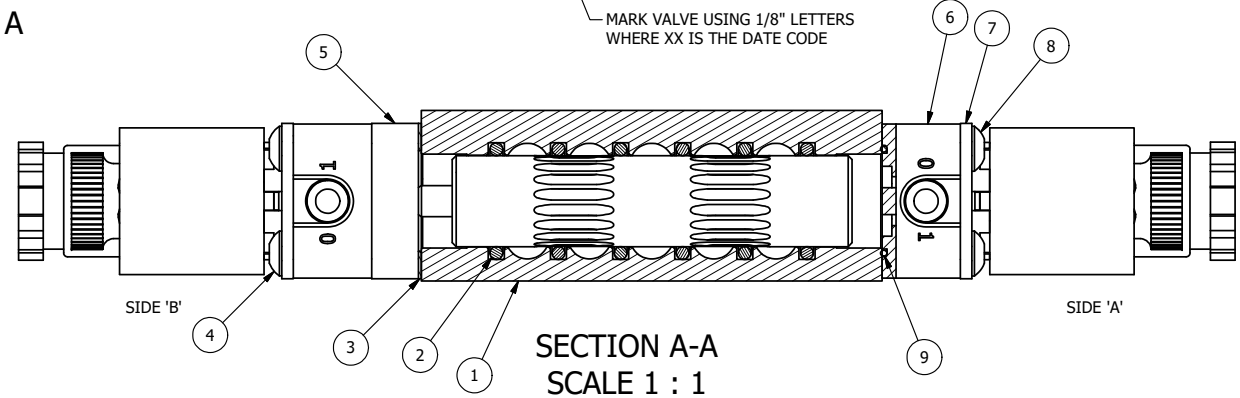


SECTION A-A
SCALE 1 : 1
VIEW FROM 3 PORT SIDE

| FLG | QTY | PART NO | DESCRIPTION |
|---|---|---|---|
| 10 | 2 | V-567W | E SERIES SINTERED BRONZE MUFFLER, DUST EXCLUDER, V-613 LOCK WASHER |
| 9 | 2 | EMG3 | GASKET - END MOUNT SOLENOID, BUNA-N, 1/4" & 3/8" VALVES |
| 8 | 4 | V-584-SS | SCREW, 10-24 X 1, BUTTON HEAD SOCKET CAP, 18-8 OR 303 SS |
| 7 | 2 | SEC3-7 | PLATE, RE-INFORCEMENT, SOLENOID, STAMPED, 304 STAINLESS |
| 6 | 2 | V-564 | SYSTEM 8 INTRINSICALLY SAFE SOLENOID OPERATOR. |
| 5 | 1 | AY-ZEMY3G | ASSY - SPR CTR, FLOAT CTR SPL, END MOUNT SOLENOID, BRASS, 1/4" & 3/8" VALVES |
| 4 | 4 | V-601-SS | SCREW, 10-24 X 1-1/2, BUTTON HEAD SOCKET CAP, 18-8 SS OR EQUIVQLENT |
| 3 | 1 | ECG3 | GASKET - END CAP, 1/4" & 3/8" VALVE |
| 2 | 6 | V-39 | O-RING, VITON, STD BODY, 1/4" & 3/8" VALVES |
| 1 | 1 | ZB3-1 | BODY - BRASS, UPPER PILOTS (BUTTON BLEEDER), 3/8" SIDE PORT VALVE |

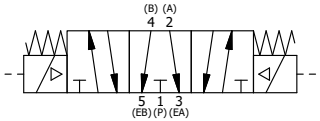


LIMITS ON DIMENSIONS UNLESS OTHERWISE SPECIFIED
2-PL DECIMAL ± .01
3-PL DECIMAL ± .005
FRACTIONAL ± 1/64
ANGULAR ± 1/2'

**AAA PRODUCTS INTERNATIONAL**
7114 Harry Hines Blvd
Dallas, TX 75235

| | | | |
|---|---|---|---|
| DRAWN: RMcKenna | DATE: 5/21/2019 | CHECKED: KWaite | DATE: 5/21/2019 |
| SCALE: 1 : 1 | SHEET: 1 OF 1 | RELEASED: HWomack | DATE: 5/21/2019 |

TITLE:
3/8" SIDE PORT, DBL SOL, 3 POS, FLOAT SPR CTR, INTR SAFE, 24VDC, BR & SS, DUST EXCLDR, EXT PILOT

PART NO.: ZESY3GALZ 24VDC

REV.:

THE INFORMATION CONTAINED WITHIN THIS DOCUMENT IS PROPRIETARY TO AAA PRODUCTS AND MAY NOT BE DISCLOSED WITHOUT PRIOR WRITTEN CONSENT

D:\Engineering\Product\Valve\Assembly\Standard\SCV\DWG\ZESY3GALZ-24VDC.dw